ISO 9001 : 2015
證書編號 : CC 2054

ISO 9001 : 2015
證書編號 : CC 2054

HOOAIR

www.hooair.hk

BENEFITS

- Space saving concept
- Quick release access door for inspection
- Various options available
- Filter section
- Air Volume Damper
- Dual motor arrangement
- External mounted control box
- With optional inverter

優點

- 結果緊湊，節省空間
- 安裝方便，便於修理
- 多種額外配置
- 可選初、中、高效塵網
- 風量調節閥
- 按客戶要求安裝備用馬達
- 外裝控制箱
- 外裝變頻器

Identification
（產品型號識別）

HW VE - 400 KF

- HW: 'HOOAIR' Product 豪華空調產品
- VE: Ventilation/Exhaust 新風/排風
- 400: Diameter of fan wheel 風扇葉輪直徑
- KF: Type of fan: KF/TMF-Forward curved KB/TMB-Backward curved 風機類型: 前傾葉葉輪風機 後傾葉葉輪風機

NICOTRA

KRÜGER

amca CERTIFIED RATINGS AIR PERFORMANCE AIR MOVEMENT AND CONTROL ASSOCIATION INTERNATIONAL, INC.®

CENTRIFUGAL FANS

豪華國際空調有限公司
H.W. International Air Conditioning Ltd.
九龍灣宏開道15號九龍灣工業中心10樓26室
Unit No. 26, 10/F., Kowloon Bay Ind. Centre,
15 Wang Hoi Road, Kowloon Bay, Kowloon
Tel: (852) 2796 8888 Fax: (852) 2796 8899
Email: info@hooair.com

Catalogue H.W. 5-21

HOOAIR

YOUR PERFECT PARTNER

Ventilation Fan & Exhaust Fan Unit
(新風及排風抽氣設備)

HWVE- SERIES

1800 – 65000 m³/h (15 Models)

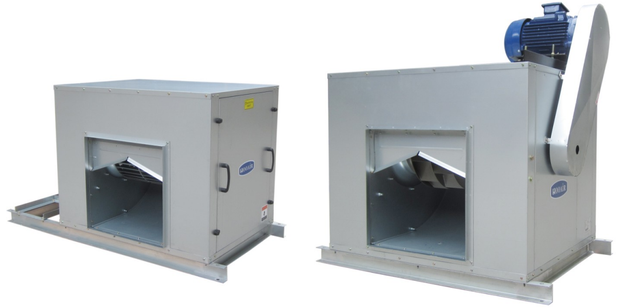

Centrifugal Fan (Backward & Forward) Type
離心風扇 (前傾及後傾)類別

H.W. International Air Conditioning Ltd.

HOOAIR

Company profile

H.W. International Air Conditioning Ltd. was established in Hong Kong since 1988, the company focus on heating and ventilation air-conditioning products. We owned many years of production experiences and abundant technical skills. We can provide custom made design environment air-conditioning and OEM products. Our product design, conformed to ASHRAE and ARI standard. Our company can provide production design, manufacture, sales marketing and after-sales services to Hong Kong, Macau and Mainland market.

Why does the customer choose HOOAIR? We have a professional teams are well-prepared to provide comprehensive services ices to customers.

- Our company is one of the biggest and profound air-conditioning manufacturer in Hong Kong
- Standardize all the parts to speeds up the productivity and delivery time.
- Provide professional simplify solution method to the customer.
- Custom made product – we will be able to provide simple and effective planning.
- All component parts of our product, including galvanized plate, fan, motor, and accessory parts are come from high quality international famous brand.

公司簡介

豪華國際空調有限公司於1988年在香港成立，公司集中於冷暖中央空調產品。我們擁有了多年生產經驗和豐富的技術。可按照客戶要求設計和生產環保空調設備和**OEM** 產品。我們的產品設計均符合美國供暖制冷及工程師學會 **(ASHRAE)** 和美國制冷學會 **(ARI)** 標準。我們提供生產設計、制造、銷售行銷和售後服務於香港、澳門和國內市場。

為什麼顧客選擇 **HOOAIR?** 我們擁有專業團隊為客戶提供全面服務。

- 我們是香港生產空調產品最大供應商之一。
- 標準化所有零件，加快生產時間和縮短交貨日期。
- 為顧客提供專業簡單方案。
- 對於非標準產品我們會提供簡單和有效益的計劃。
- 我們產品的所有組件，包括鍍鋅板、風扇、馬達、以及輔助部件零件均來自高質量之國際著名品牌。

Management Object
管理目標

- High Quality Products 高品質產品
- Development High Technology 開拓新科技術

Hooair Commitment
公司承諾

- Excellent Professional Services 專業服務態度

HWVE ~ 15 Models Air-Flow range (1800CMH – 65000CMH)

Centrifugal (D.I.D.W.) Forward curved 離心式(雙進風)前傾

Model 型號 HWVE-	200KF	225KF	250KF	280KF	315KF	355KF	400KF	450KF	500KF	560KF	630KF	710KF	800KF	900TMF	1000TMF
Air-Flow(CMH) 風量	1800	2550	3400	4750	5800	7000	8150	11040	17000	22070	27170	37360	46695	53000	65000
Static Pressure(pa) 靜壓	150	150	150	200	200	250	250	250	300	350	400	400	400	500	500
Fan Dia.(mm) 風扇直徑	200	225	250	280	315	355	400	450	500	560	630	710	800	900	1000
Motor power(kw) 馬達功率	0.75	0.75	0.75	0.75	1.5	1.5	1.5	2.2	4	5.5	7.5	11	15	15	18.5
Weight Internal motor 內置	63	67	79	96	138	163	198	239	296	542	672	824	955	1075	1242
重量(kg) External motor 外置	64	67	79	94	134	158	190	228	291	540	693	830	980	1074	1262

Centrifugal (D.I.D.W.) Backward curved 離心式(雙進風)後傾

Model 型號 HWVE-	200KB	225KB	250KB	280KB	315KB	355KB	400KB	450KB	500KB	560KB	630KB	710KB	800KB	900KB	1000KB
Air-Flow(CMH) 風量	1800	2550	3400	4750	5800	7000	8150	11040	17000	22070	27170	37360	46695	53000	65000
Static Pressure(pa) 靜壓	500	500	500	500	500	500	500	500	500	500	500	500	500	500	500
Fan Dia.(mm) 風扇直徑	200	225	250	280	315	355	400	450	500	560	630	710	800	900	1000
Motor power(kw) 馬達功率	0.75	0.75	1.5	1.5	2.2	2.2	2.2	3	5.5	7.5	7.5	11	15	15	18.5
Weight Internal motor 內置	63	67	92	110	155	180	221	252	331	557	675	837	972	1114	1314
重量(kg) External motor 外置	64	67	92	108	148	170	218	241	326	555	696	849	997	1119	1334

Remarks: * The above specifications are subject to change without notice. (規格及參數改動恕不另行通知)

Ventilation and Exhaust Fan Unit (Internal Motor)

Centrifugal (D.I.D.W.) Forward / Backward curved

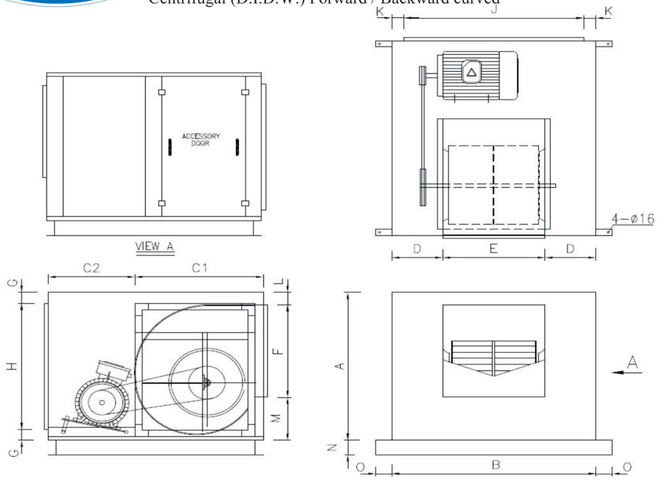

Casing: 1.0~1.5mm G.I. sheet

Model	A	B	C1	D	E	F	G	H	J	K	L	M	O
HWVE-200KF	465	550	343	147	256	256	64	337	422	64	74	135	102
HWVE-225KF	500	600	382	156	288	288	64	372	472	64	64	148	102
HWVE-250KF	550	660	419	169	322	322	76	398	508	76	68	160	102
HWVE-280KF	620	720	466	180	360	360	76	468	568	76	84	176	102
HWVE-315KF	665	810	518	203	404	404	76	513	658	76	66	195	102
HWVE-355KF	745	930	578	239	452	452	76	593	778	76	73	220	102
HWVE-400KF	840	1015	651	254	507	507	76	688	863	76	84	249	102
HWVE-450KF	930	1140	726	285	569	569	76	778	988	76	84	277	102
HWVE-500KF	1020	1270	800	316	638	638	76	868	1118	76	83	299	102
HWVE-560KF	1130	1370	893	327	715	715	102	926	1166	102	83	332	102
HWVE-630KF	1260	1600	999	399	801	801	126	1008	1348	126	84	375	102
HWVE-710KF	1405	1800	1121	451	898	898	126	1153	1548	126	107	400	102
HWVE-800KF	1580	2000	1255	496	1007	1007	126	1328	1748	126	121	452	102
HWVE-900TMF	1770	2200	1408	535	1130	1130	152	1466	1896	152	128	512	102
HWVE-1000TMF	1930	2500	1541	616	1267	1267	152	1626	2196	152	128	535	102

Base frame	64x64 角鐵	64x32 摺槽	76x38 摺槽	100x50 摺槽	80x40 槽鐵	100x50 槽鐵
N*	5	64	76	100	80	100

Motor k.w.	0.75	1.5	2.2	3	4	5.5	7.5	11	15	18.5	22	30	37
C2	320	320	360	360	360	450	450	500	500	550	650	700	750

Remarks: 1) The above specifications are subject to change without notice.
2) Same dimension of forward & backward curved, and has a tolerance of ± 3mm.
3) Maintenance space: 600 - 800mm

version: 05-2021

Ventilation and Exhaust Fan Unit (External Motor)

Centrifugal (D.I.D.W.) Forward / Backward curved

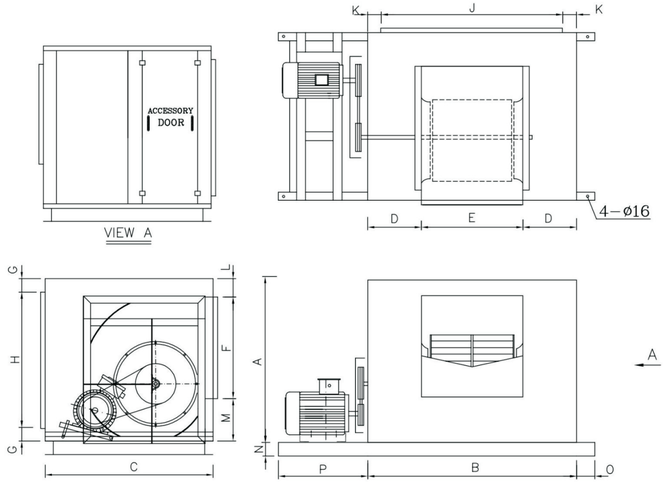

Casing: 1.0~1.5mm G.I. sheet

Model	A	B	C	D	E	F	G	H	J	K	L	M	O
HWVE-200KF	465	550	560	147	256	256	64	337	422	64	74	135	102
HWVE-225KF	500	600	560	156	288	288	64	372	472	64	64	148	102
HWVE-250KF	550	660	560	169	322	322	76	398	508	76	68	160	102
HWVE-280KF	620	720	660	180	360	360	76	468	568	76	84	176	102
HWVE-315KF	665	810	700	203	404	404	76	513	658	76	66	195	102
HWVE-355KF	745	930	760	239	452	452	76	593	778	76	73	220	102
HWVE-400KF	840	1015	900	254	507	507	76	688	863	76	84	249	102
HWVE-450KF	930	1140	940	285	569	569	76	778	988	76	84	277	102
HWVE-500KF	1020	1270	1040	316	638	638	76	868	1118	76	83	299	102
HWVE-560KF	1130	1370	1150	327	715	715	102	926	1166	102	83	332	102
HWVE-630KF	1260	1600	1275	399	801	801	126	1008	1348	126	84	375	102
HWVE-710KF	1405	1800	1400	451	898	898	126	1153	1548	126	107	400	102
HWVE-800KF	1580	2000	1600	496	1007	1007	126	1328	1748	126	121	452	102
HWVE-900TMF	1770	2200	1650	535	1130	1130	152	1466	1896	152	128	512	102
HWVE-1000TMF	1930	2500	1900	616	1267	1267	152	1626	2196	152	128	535	102

Base frame	64x64 角鐵	64x32 摺槽	76x38 摺槽	100x50 摺槽	80x40 槽鐵	100x50 槽鐵
N*	5	64	76	100	80	100

Motor k.w.	0.75	1.5	2.2	3	4	5.5	7.5	11	15	18.5	22	30	37
P*	430	450	480	480	500	550	600	700	750	800	850	900	950

Remarks: 1) The above specifications are subject to change without notice.
2) Same dimension of forward & backward curved, and has a tolerance of ± 3mm.
3) Maintenance space: 600 - 800mm

version: 05-2021